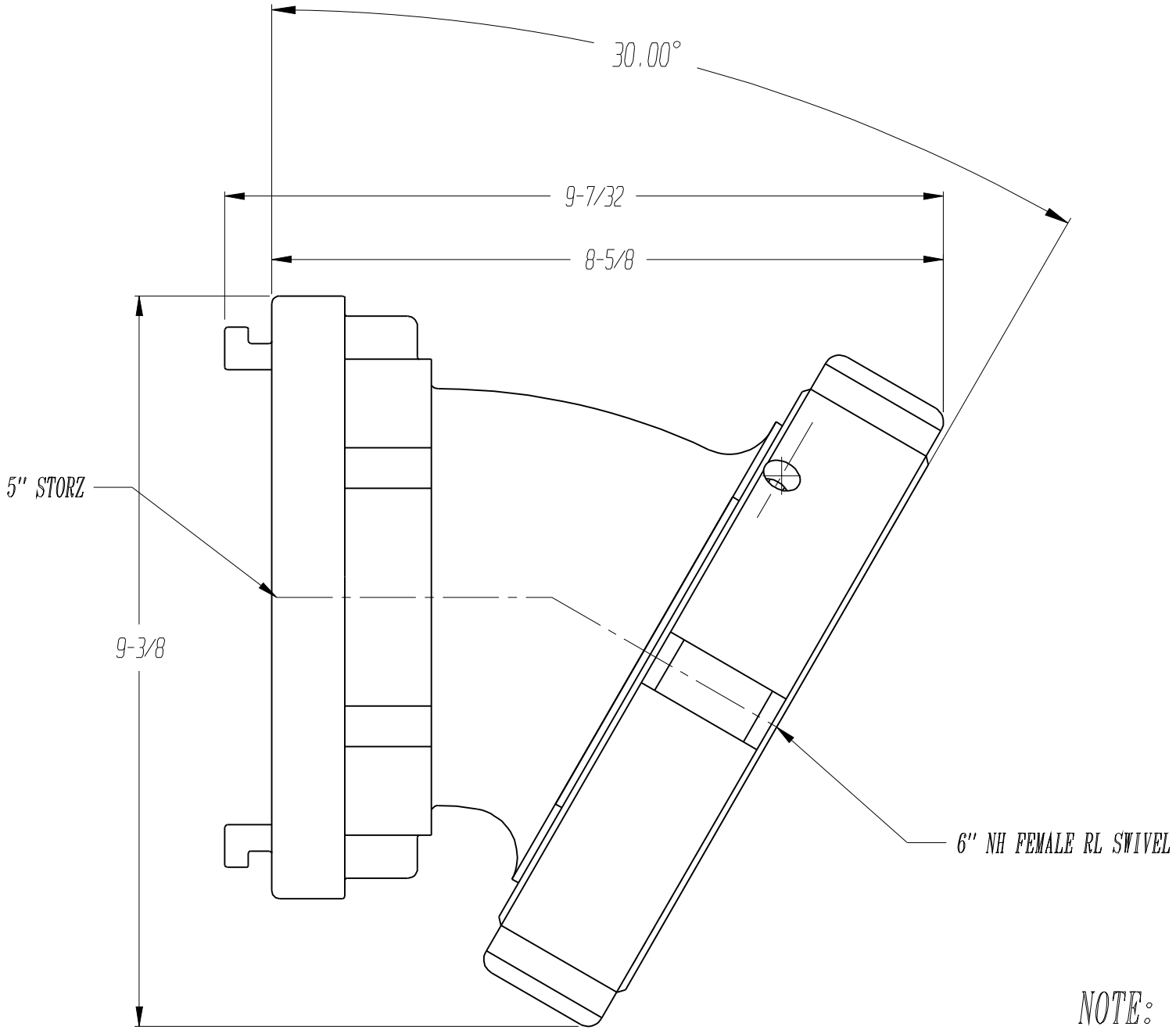

NOTE:
ALL DIMS APPROXIMATE

OCHEK CO. INC.	5" STORZ X 6" NH FEMALE RL SWIVEL 30 DEG. ELBOW	REV	DWG. BY ML	DWG. NO. SKE56R	1-1
			SCALE NONE	DATE 11/6/01	
		PART NO. SKE56R		CKVIEWER*	